WE ARE RIPPA

Shandong Rippa Machinery Group Co., Ltd. is located at Guang'an Road, High-tech Zone, Jining City, Shandong Province. It is a national high-tech enterprise with the right to import and export.

The company's employees are vigorous and enterprising, constantly creating the legend and glory of Rippa!

Powered by **kubota**

RIPPA®

Shandong Rippa Machinery Group Co., Ltd.

Add: 36 meters north of Guang'an Garden, Guang'an Road, High-tech Zone, Jining City, Shandong Province

www.rippa.com

Some specifications are based on engineering measurements and may deviate from actual conditions. Specifications are for comparison purposes only and are subject to change without notice. Specifications of individual RIPPA equipment will vary based on normal variations in design, manufacturing, operating conditions and other factors. Some pictures of RIPPA equipment are not limited to standard packages.

RIPPA®

EXCAVATOR

R57 PRO



MEET THE NEW GENERATION OF RIPPA MACHINES

Lift your business to the next level with the R57 PRO RIPPA excavators. Exceptionally powerful, yet environmentally friendly, The R57 PRO excavators feature extraordinary fuel efciency

RAISE PROFITS, PRODUCTIVITY &FUEL EFFICIENCY

TOP PERFORMANCE IN A VERSATILE PACKAGE

A compact & powerful machine for the best adaptability to any work site.Large hydraulic capacity of a tool carrier.Works in narrow spaces thanks an ultra-compact design and boom swing.

EFFICIENCY

The new R57 PRO ofer really high level of efciency, in any application, thanks to a brand new design. The R57 PRO ofers the best compactness in the market, where the R57 PRO ofers the best compromise between compacity and lifting performance, when heavy lifting is needed.

MANEUVERABILITY

The smooth and precise hydraulic system can drive all the attachments needed on the construction site. The operator can control the flow proportionally. Pedal driving can be operated by manual lever without using pedals. The two travel modes can be switched at any time.



EASY MAINTENANCE

Easy access from ground level to all components,
flters and refilling points.
The R57 PRO was designed to be easy to keep on the job.
Ofers easy access to flters, fuids and all service
points — including the engine, pump package, valve bank,
cooling system and plumbing.
Quick and easy machine diagnosis allows you to monitor critical systems in real time from the LCD monitor in the cab.

PRODUCTIVITY

Superior digging, pulling and traction forces to face all jobsites.

SAFETY

Anti-collision net (optional)
Powerful LED lighting with large glass door for excellent visibility
Pilot safety lock
ROPS cab
OPG protective cover (optional)

COMFORT

low noise & vibration levels and excellent all-round visibility.
Large glass door for easy access and better visibility.
Fully adjustable heated air suspension seat, air conditioning with climate control as standard.

ALL-ROUNDVERSATILITY AND IMPROVEDFUEL EFFICIENCY

A MODEL WITH NOVEL FEATURES

control for the hydraulic system and for the engine

- Improved ergonomics, increased comfort and excellent all-round visibility,

Improved reliability, using high-performance materials - combined with new methods of structural stress analysis - have increased component life expectancy,

thus reducing running costs

- Reduced maintenance increases the excavator's availability and lowers the operating costs

HIGHEST PERFORMANCE IN ANY WORK ENVIRONMENT

The advanced hydraulic system, combined with a powerful engine, provides the biggest digging and tractive forces for efcient operation. As a result, the R57PRO provides outstanding performance, work efciency and the ability to adapt to any work environment.

Kubota V2607 (EPA4/Euro 5)

The R57 PRO has a powerful and eco-friendly heart, always providing high operating efciency and pleasant working conditions.

BOOM SWING

The boom swing function allows you to work in very narrow areas

POWERFUL DIGGING FORCE (BUCKET)

Powerful, efcient, and with increased digging force can face every job site condition.

DOZER BLADE

Welded, unitized blade provides durability even under harsh working conditions.

DUAL-SPEED FAST AND SLOW

The fast gear is suitable for fast movement of equipment within the site, saving transition time, improving overall construction efficiency, precise control, and adapting to various working conditions



THEIDEALWORKSPACE DESIGNED AROUND YOU

1. Seat
2. Arm rest
3. Left-hand work lever(joystick)
4. Assistive device buttons
5. travel pedal
6. Foot vent
7. Defrodter vent
8. Travel lever
9. Display monitor
10. Right-hand work lever (joystick)
11. Dozer lever
12. Cup holder
13. Safety lever
14. Starter switch
15. Cigarette lighter
16. Radio
17. Air conditioning panel



The cabin has been ergonomically designed with comfort in mind

The R57PRO are designed to provide you with the best possible working conditions. Its spacious interior ofers a fully adjustable and comfortable seat. Comfortably seated, you have easy access to several storage compartments and a clear all-round view of the worksite. Noise and vibration levels are reduced while air conditioning allows you to maximise your productivity and return on investment.

MORE DURABILITY –LESS MAINTENANCE

A reinforced chassis provides strength, while the optimised boom shape ensures uniform load distribution for more durability. Top quality materials, the most advanced computer-aided design and endurance testing under the most demanding conditions ensure your excavator will keep on performing. The R57PRO are designed for low maintenance with longer intervals resulting in more machine availability on site while skilled RIPPA-trained technicians are available to provide extra support when needed.





MORE DURABILITY — LESS MAINTENANCE

The most advanced technology developed by RIPPA.
Was integrated into the R57PRO excavators for powerful per-formance and simple, easy maintenance.
This provides the operator with convenient maintenance check points
and maximizes the R57PRO's work efciency.



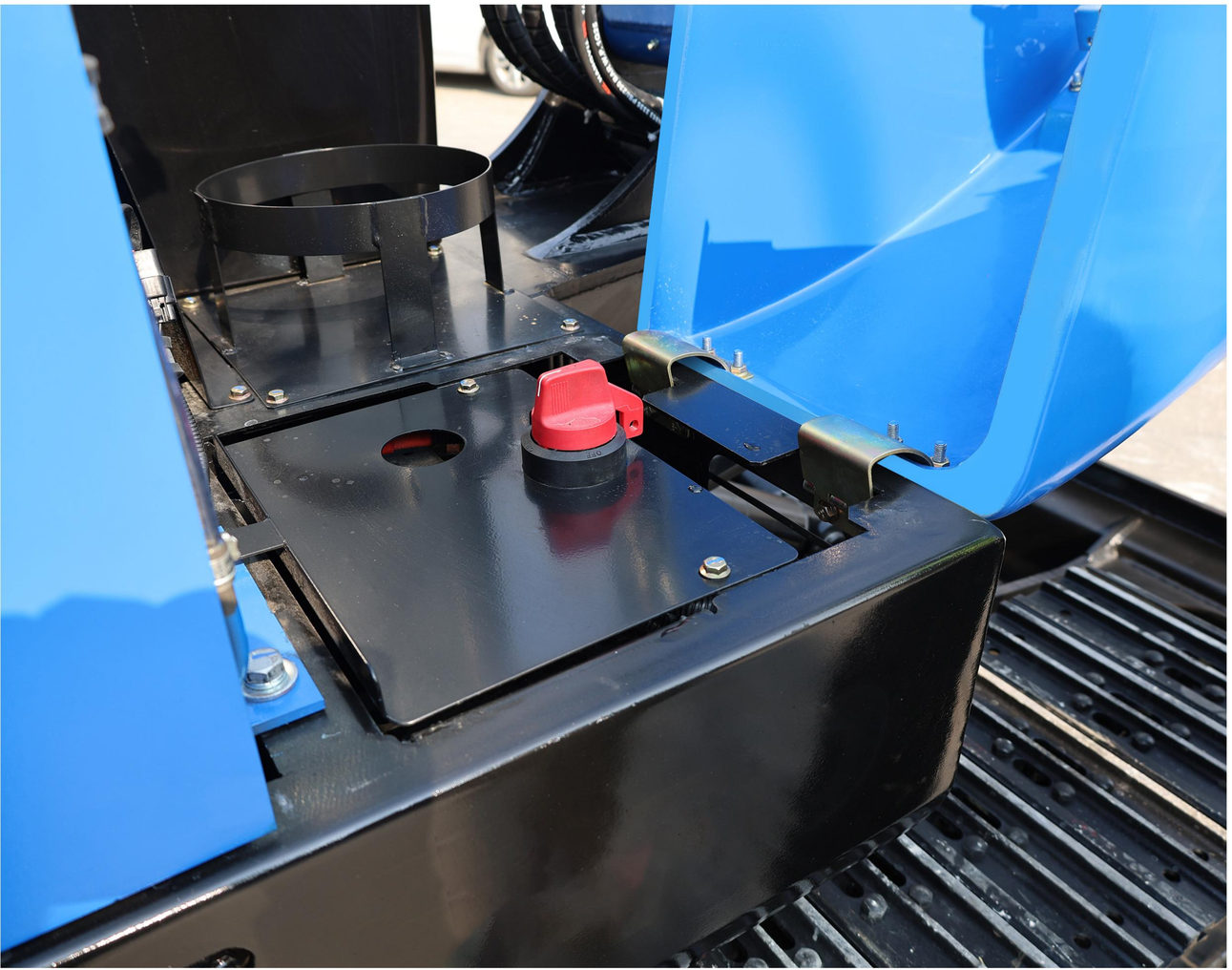

BEST MAINTENANCE ACCESS

MAINTENANCE ACCESS MADE SIMPLE

A battery cut-of switch makes it easy to disconnect the battery during long-term storage
The hour meter display can be easily checked from ground level - For extra accessibility and servicing convenience, all flters

AIR BREATHER

It can effectively block dust, sand and other impurities in the air, prevent them from entering the engine cylinder, avoid wear and failure, and extend the life of the engine.

ENGINE ROOM

The engine compartment is designed for easier service,
and the sturdy sound-proofng inside the engine cover reduces the noise to provide a more comfortable environment for the operator and those working around the machine.

TRACKS

The standard steel crawler has a solid structure and is suitable for heavy-duty conditions. It can support a larger machine weight and operating load, and has strong stability. The optional rubber crawler has stronger anti-skid and grip, and causes less damage to sidewalks and roads in urban environments.

OIL GAUGE

Hydraulic oil level can be easily checked through the gauge on the side of the hydraulic tank.

GREASE PIPING

Integrated grease piping is designed for easy maintenance of the swing bearing and boom swing cylinder.

EXTERNAL FUEL CAP

The external lockable fuel tank cap makes refueling easier and safer. When the oil level reaches the minimum, a warning beep sounds for added convenience.

ENGINE HOOD HYDRAULIC SUPPORT

No need for manual support, one-button opening saves effort and time, and improves maintenance efficiency. The hydraulic rod can firmly support the engine cover to avoid accidental falling, ensure the safety of maintenance person-nel, and the support angle is reasonable, with larger inspec-tion space, making daily maintenance and repair work smoother.



ASSISTIVE DEVICES



Breaker



Scarifier



Compactor



Pile hammer



Crushing pliers



Double cylinder
hydraulic shears



Single cylinder
crushing shear



Rotating log grapple



Screen bucket



Strengthen rock bucket



Rake



Hawkbill scissors

ENVELOPE DIAGRAM

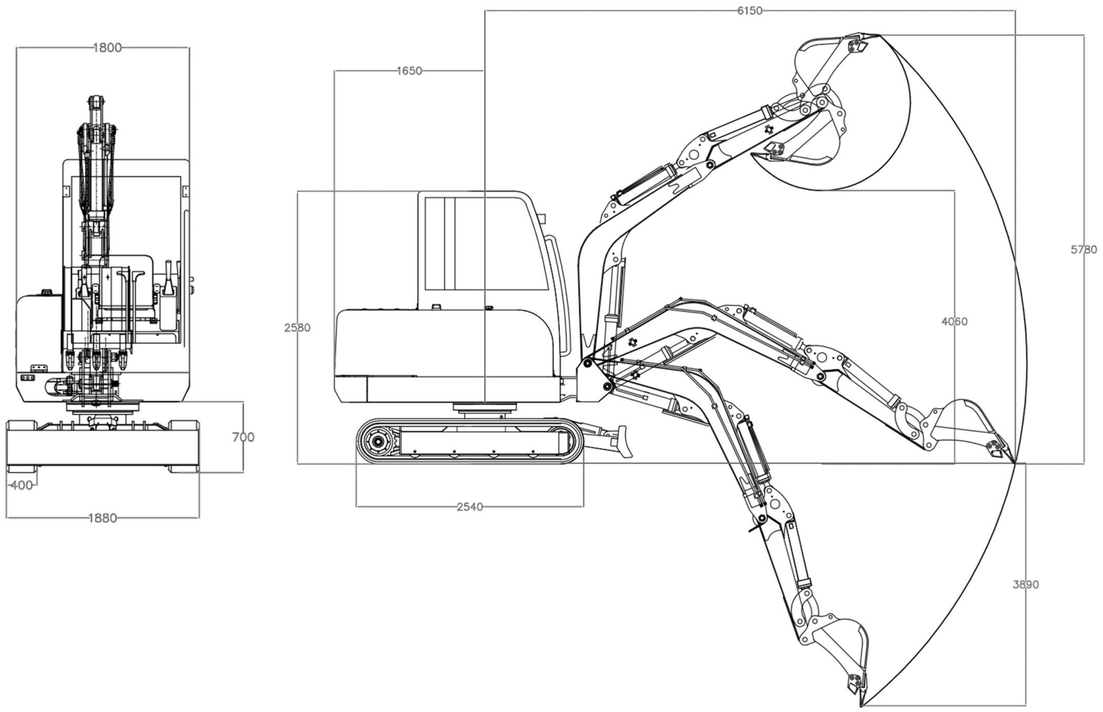

CONFIGURATION

Optional/ Additional	Cab	Standard
	AC	Standard
	Reversing camera	Optional
	Control handle	Pilot hydraulic
	Boom swing	None
	Bulldozer swing	Optional
	Change color	Optional
	Steel track, rubber track	Optional
	Hydraulic thumb clamp	Optional
Attachments	Quick change	Optional
	Breaker	Optional
	Ripper	Optional
	Rake	Optional
	Hydraulic wood grabber	Optional
	Mower	Optional

PARAMETER

		unit	SI	US
Basic Information	Machine working weight	kg / lb	5775kg	12705lb
	Bucket capacity	m³ / ft³	0.175m³	6.18ft³
	Travel speed low/high speed	km/h / mph	0-2.4/0-3.8km/h	0-1.5/0-2.4mph
	Gradeability	%	35%	35%
	Ground pressure	kpa / psi	35.4kpa	5.1psi
Machine parameters	Maximum digging force	KN / lbf	32KN	7194lbf
	Maximum digging radius	mm / in	6160mm	242.5in
	Maximum digging depth	mm / in	3785mm	149in
	Maximum digging height	mm / in	5810mm	228.7in
	Maximum unloading height	mm / in	4080mm	160.6in
	Maximum deflection angle	mm / in	-	-
	Track extension range	mm / in	-	-
	Engine brand		Kubota	Kubota
	Engine model		V2607	V2607
	Maximum horsepower	ps/hp	48.3ps	47.6hp
	Maximum power	kw	35.5kw	35.5kw
	Maximum speed	rpm	2200rpm	2200rpm
	Displacement	L / gal	2.615L	0.69gal
	Number of cylinders		4	4
	Cooling method		Water-cooled	Water-cooled
	Engine oil change amount	L / gal	6.1L	1.6gal
	Fuel form		Diesel	Diesel
	Fuel grade		0/-10	0/-10
	Theoretical fuel consumption		9.72L/h	9.72L/h
	Transport length	mm / in	5850mm	230.3in
	Transport width	mm / in	2000mm	78.7in
	Transport height	mm / in	2580mm	101.6in
	Counterweight ground clearance	mm / in	669mm	26.3in
	Bucket width	mm / in	600mm	23.6in
	Boom length	mm / in	3000mm	118.16in
	Arm length	mm / in	1600mm	63in
	Bulldozer blade width	mm / in	1880mm	74in
	Main pump type/model		Load sensitive variable piston pump/68	
	Main pump brand		HYTEK	HYTEK
	Main pump maximum flow	L/min / gpm	149.6L/min	39.5GPM
Transport parameters	Multi-way valve		8-way hydraulic multi-way valve	
	Multi-way valve brand		HYTEK	HYTEK
	Rated set pressure	mpa/ psi	22.5MPa	3263psi
	Maximum set pressure	mpa/ psi	25MPa	3626psi
	Travel hydraulic motor type		TM07	TM07
	Travel motor brand		ZHTE	ZHTE
	Motor displacement	ml/r	22-44ml/r	22-44ml/r
	Slewing hydraulic motor type		ZHTE DH80	ZHTE DH80
	Displacement	ml/r	43.2ml/r	43.2ml/r